SERVICE MANUAL

SANYO

CASSETTE TAPE DECK

RD S30

(U.S.A)

SPECIFICATIONS

Tape	Metal, CrO_2, normal tape
Recording system	AC bias, 4-track stereo
Erasing system	AC erasing, 2-track
Tape speed	1-7/8 i.p.s. (4.75 cm/sec.)
Rewind and fast forward time	Approx. 110 sec. (C–60)
Wow and flutter	0.06% (WRMS)
Frequency response	40 – 16,000 Hz (metal)
	40 – 15,000 Hz (CrO_2)
	40 – 13,000 Hz (normal)
Signal to noise ratio (metal tape)	77 dB (Dolby C-NR on)
	57 dB (Dolby NR off)
Inputs (impedance/sensitivity)	MIC: 400 ohms to 10 kohms/0.3 mV
	LINE IN: 50 kohms/100 mV
Outputs (impedance/sensitivity)	LINE OUT: 2 kohms/0.4 V
	PHONES: 8 ohms to 10 kohms
Power requirements	AC: 120 V, 60 Hz
Power consumption	12 W
Dimensions (Approx.)	16-1/2″ (W) x 8-3/4″ (D) x 4-3/8″ (H)
	(420 x 220 x 110 mm)
Weight (Approx.)	9 lbs. (4 kg)

* Specifications subject to change without notice.

WM-9452

REMOVAL OF CABINET

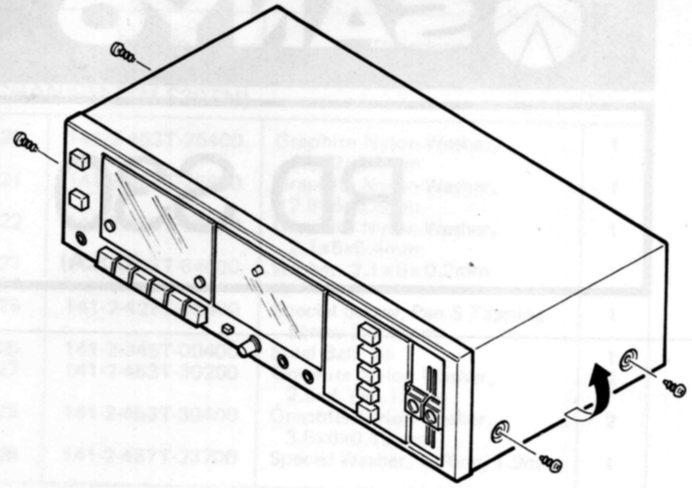

REMOVAL OF FRONT PANEL

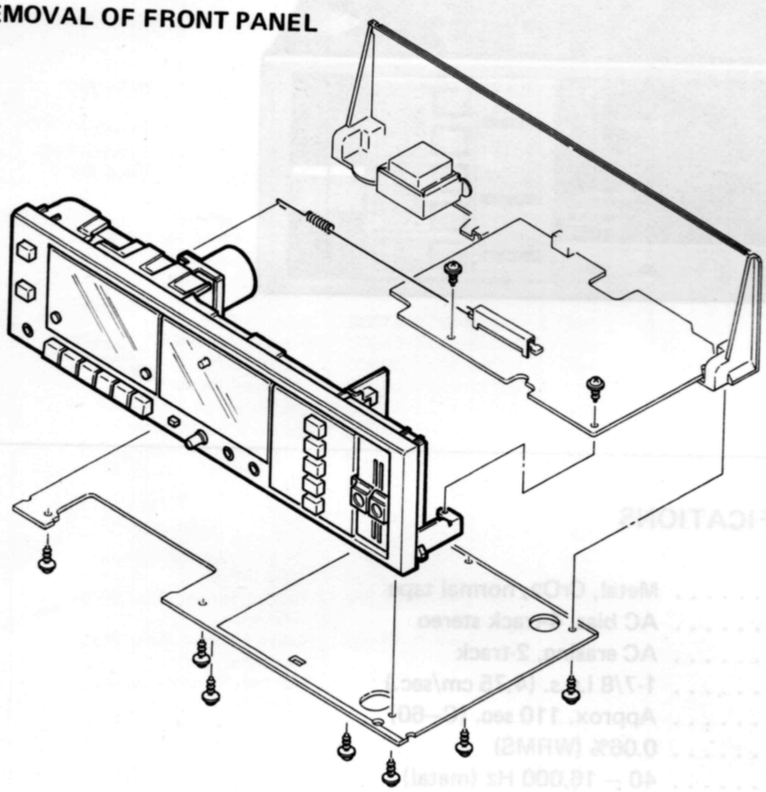

REMOVAL OF MECHANISM

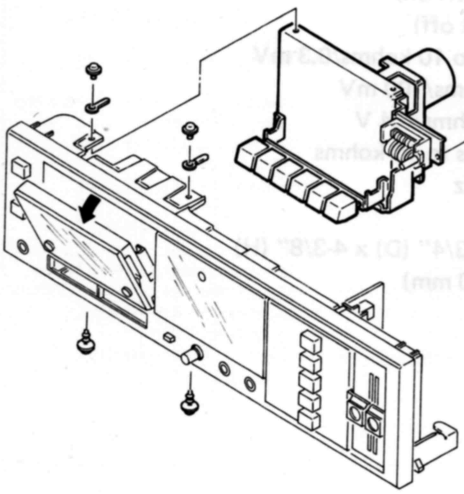

MOTOR REPLACEMENT

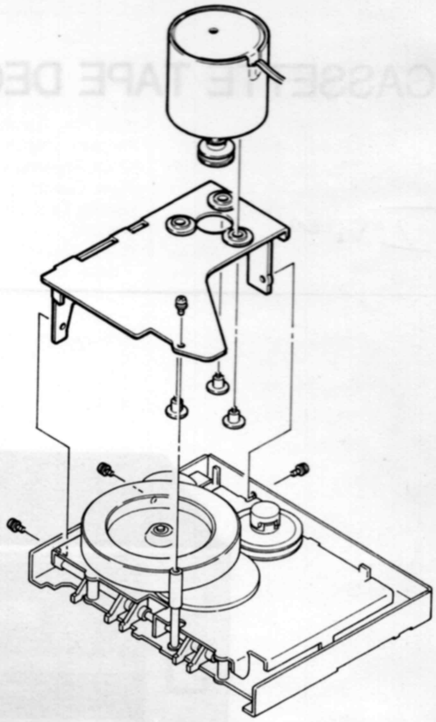

MOTOR SPEED ADJUSTMENT

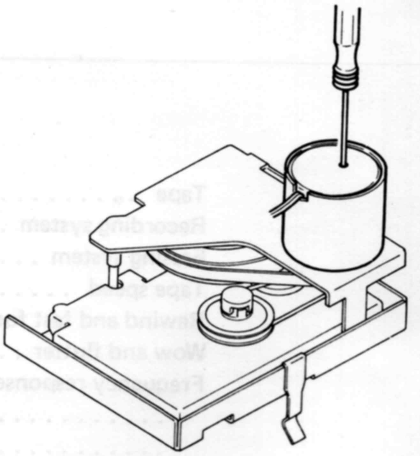

MOTOR SPEED ADJUSTMENT

Play back the test tape (such as MTT-111, 3 kHz, for instance), and turn the SVR located on the back of motor with a blade screwdriver so that the frequency counter registers 3,000 Hz.

BELT REPLACEMENT (1)

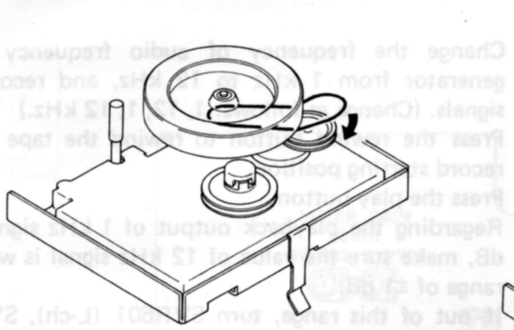

(2)

(3)

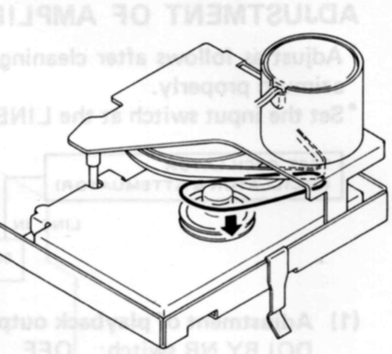

HEAD REPLACEMENT & AZIMUTH ADJUSTMENT

After replacing the head, demagnetize the head with head eraser.
Prior to adjustment, perform head cleaning. Play back the test tape for azimuth adjustment (such as VTT-658, 10 kHz, for instnace), and turn the azimuth adjusting screw with a Phillips screwdriver so that the output of the right and left channels becomes the maximum.

HEAD REPLACEMENT

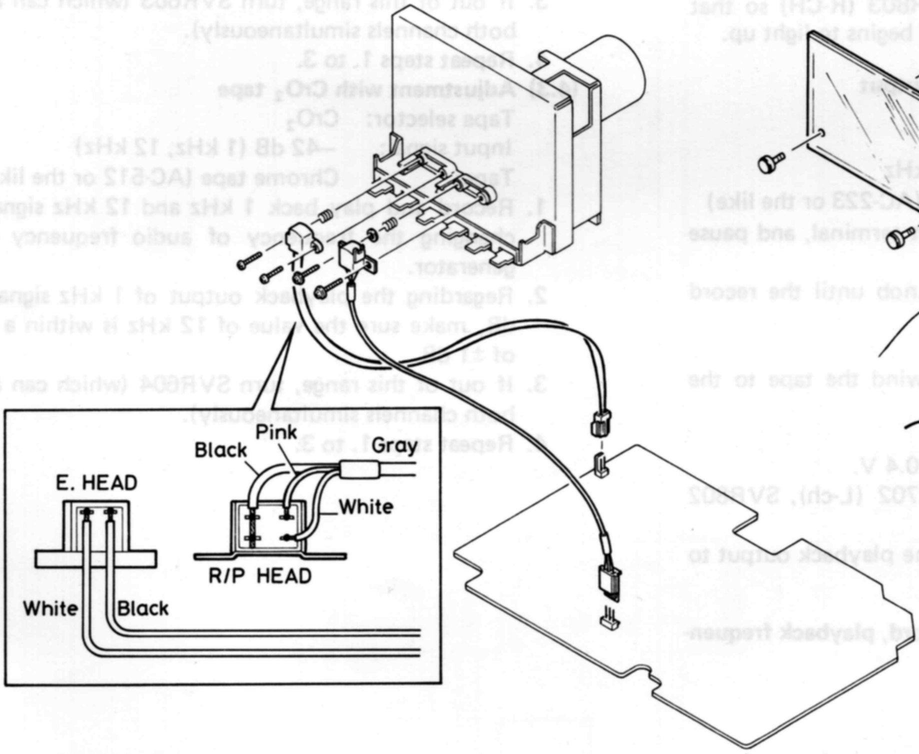

HEAD AZIMUTH ADJUSTMENT

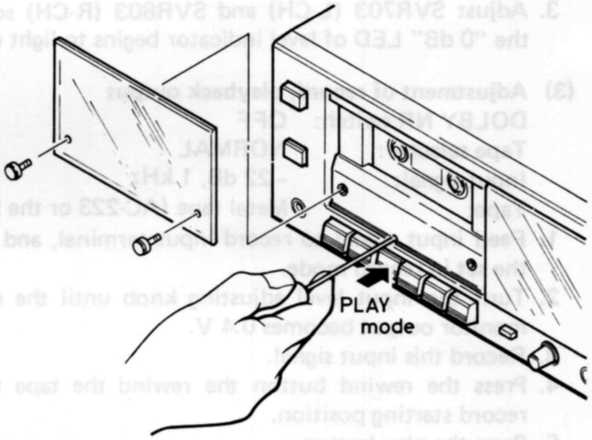

ADJUSTMENT OF MECHANISM

Prior to measurement, clean the head, capstan and pinch roller.
Confirm of the followings torques and tensions.

Measurement item	Take-up torque	Back tension	Pulley tension
Measurement cattette	PLAY: TW-2111 F·FWD/REW: TW-2231	PLAY/F·FWD: TW-2111 REW: Torque gage	Drive power cassteet TW-2412
PLAY	30 ~ 70 gr·cm	3 ~ 5 gr·cm	> 140 g
F.FWD	90 ~ 150 gr·cm	3 ~ 5 gr·cm	Pinch roller pressure: > 230 g
REW	90 ~ 150 gr·cm	3 ~ 7 gr·cm	

ADJUSTMENT OF AMPLIFIER UNIT

*Adjust as follows after cleaning the head and adjusting its azimuth properly.
*Set the input switch at the LINE side.

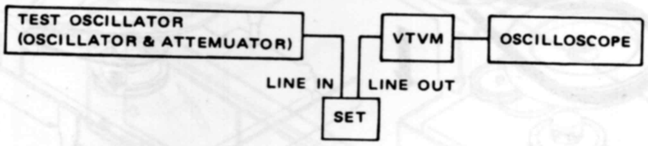

(1) Adjustment of playback output

DOLBY NR switch: OFF
Tape selector: NORMAL
Test tape: MTT-150 (Dolby tape)

Play back test tape, and turn SVR701 (L-ch), SVR801 (R-ch) until the playback output becomes 0.56 V.

(2) Adjustment of level indicator

DOLBY NR switch: OFF
Tape switch: NORMAL
Input signal: −22 dB, 1KHz
Tape: NORMAL (AC-223 etc.)

1. Feed input signal to record input terminal, and pause the set in record mode.
2. Turn the input level adjusting knob until the record monitor output becomes 0.4 V.
3. Adjust SVR703 (L-CH) and SVR803 (R-CH) so that the "0 dB" LED of level indicator begins to light up.

(3) Adjustment of record, playback output

DOLBY NR switch: OFF
Tape selector: NORMAL
Input signal: −22 dB, 1 kHz
Tape: Metal tape (AC-223 or the like)

1. Feed input signal to record input terminal, and pause the set in record mode.
2. Turn the input level adjusting knob until the record monitor output becomes 0.4 V.
3. Record this input signal.
4. Press the rewind button the rewind the tape to the record starting position.
5. Press the play button.
6. Make sure the playback output is 0.4 V.
7. If other than 0.4 V, turn SVR702 (L-ch), SVR802 (R-ch) to adjust.
8. Repeat steps 3. to 7. to adjust the playback output to 0.4 V precisely.

(4) Adjustment and checking of record, playback frequency characteristics

(4.1) Adjustment with metal tape

DOLBY NR switch: OFF
Tape selector: METAL
Input signal: −42 dB (1 kHz, 12 kHz)
Tape: Metal tape (AC-711 or the like)

1. Set the input level adjusting knob in the position determined in adjustment (3) above.
2. Attenuate the input signal from −22 dB in. (3) by further 20 dB to a final −42 dB.
3. Change the frequency of audio frequency signal generator from 1 kHz to 12 kHz, and record the signals. (Change as follows: 1, 12, 1, 12 kHz.)
4. Press the rewind button to rewind the tape to the record starting position.
5. Press the play button.
6. Regarding the playback output of 1 kHz signal as 0 dB, make sure the value of 12 kHz signal is within a range of ±1 dB.
7. If out of this range, turn SVR601 (L-ch), SVR602 (R-ch) to adjust.
8. Repeat steps 3. to 7.
9. After adjusting with metal tape, adjust similarly with normal tape and chrome tape in the sequence of parts. 4.2 and 4.3 below.

(4.2) Adjustment with normal tape

Tape selector: NORMAL
Input signal: −42 dB (1 kHz, 10 kHz)
Tape: Normal tape (AC-223 or the like)

1. Record and play back 1 kHz and 10 kHz signals by changing the frequency of audio frequency signal generator.
2. Regarding the playback output of 1 kHz signal as 0 dB, make sure the value of 10 kHz is within a range of ±1 dB.
3. If out of this range, turn SVR603 (which can adjust both channels simultaneously).
4. Repeat steps 1. to 3.

(4.3) Adjustment with CrO_2 tape

Tape selector: CrO_2
Input signal: −42 dB (1 kHz, 12 kHz)
Tape: Chrome tape (AC-512 or the like)

1. Record and play back 1 kHz and 12 kHz signals by changing the frequency of audio frequency signal generator.
2. Regarding the playback output of 1 kHz signal as 0 dB, make sure the value of 12 kHz is within a range of ±1 dB.
3. If out of this range, turn SVR604 (which can adjust both channels simultaneously).
4. Repeat steps 1. to 3.

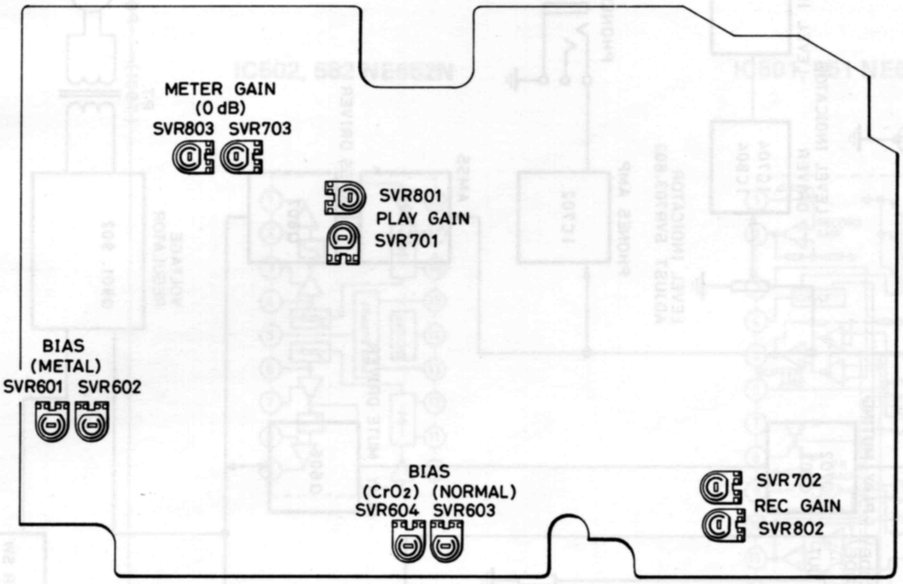
METER GAIN
(0 dB)
SVR803 SVR703
SVR801
PLAY GAIN
SVR701
BIAS
(METAL)
SVR601 SVR602
BIAS
(CrO2) (NORMAL)
SVR604 SVR603
SVR702
REC GAIN
SVR802

BLOCK DIAGRAM

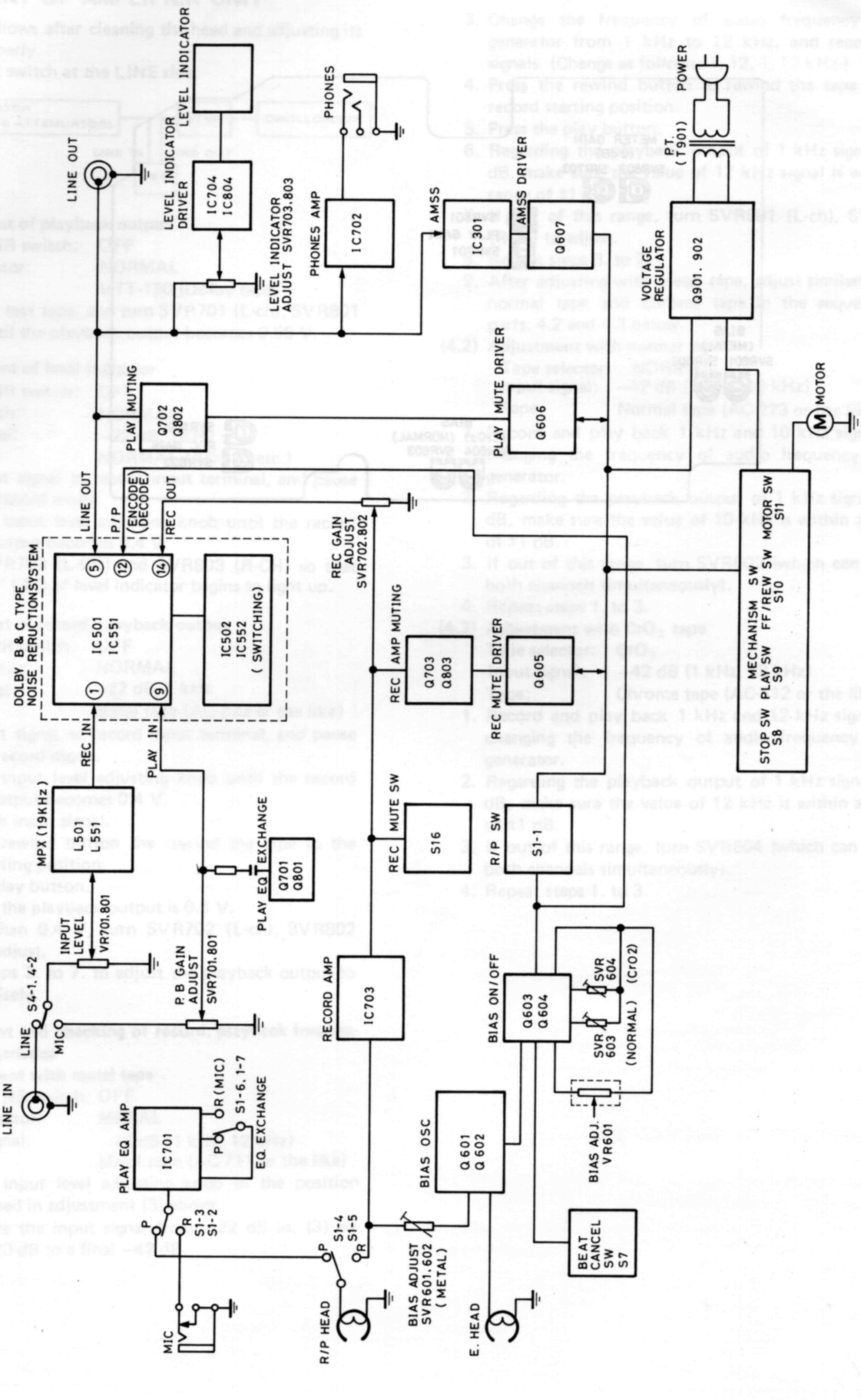

PIN DESCRIPTION

IC502, 552 NE652N

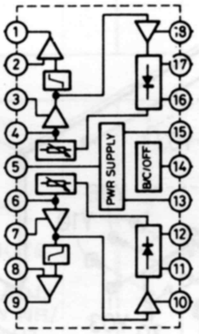

1. High level stage output
2. High level stage input
3. AC ground high level stage
4. High level stage side chain
5. Vcc
6. Low level stage side chain
7. AC ground low level stage
8. Low level stage in
9. Record output
10. Low level stage high pass filter
11. Low level stage integrating filter
12. Low level stage control voltage
13. Vcc
14. Mode B/C/NR off switch input
15. Ground
16. High level stage control voltage
17. High level stage integrating filter
18. High level stage high pass filter

IC501, 551 NE654N

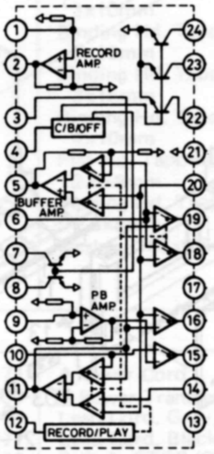

Dolby B-C Noise Reduction System.
Switches shown record position.

1. Record input
2. MPX-filter input
3. MPX-filter output
4. Mode B/C/NR OFF switch input
5. Line output
6. Spectral skewing network
7. Spectral skewing network switch
8. Anti-saturation filter switch
9. Playback input
10. Anti-saturation filter
11. Anti-saturation filter input
12. Record/playback switch input
13. Vcc
14. Record output
15. Low level stage main chain input
16. Low level stage side chain input
17. Vcc
18. Hihg level stage side chain input
19. High level stage main chain input
20. High level stage output
21. Ground
22. Side chain filter switch
23. Integrating filter switch
24. Integrating filter switch

CABINET & CHASSIS EXPLODED VIEW

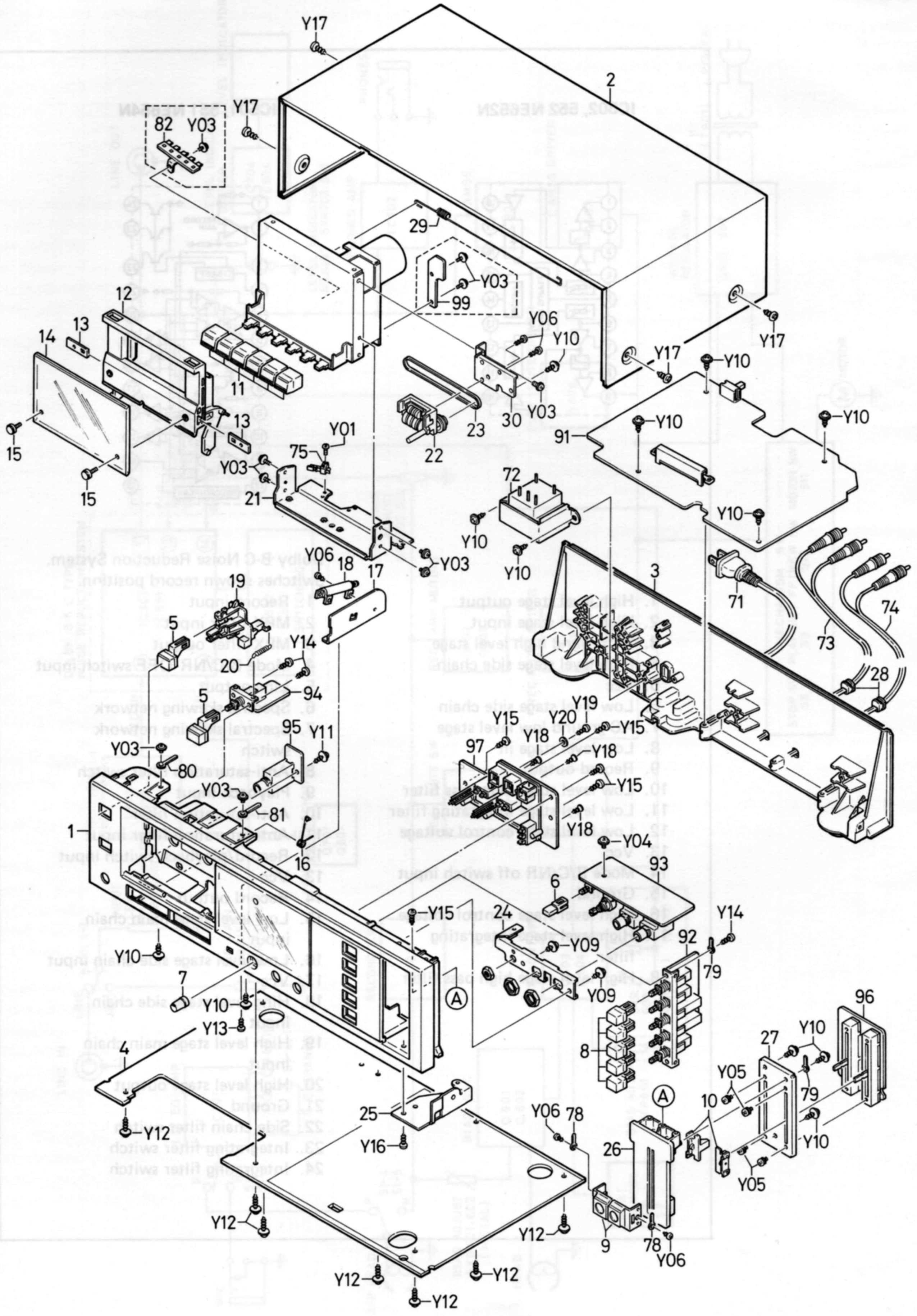

Key No.	Part No.	Despcription	Q'ty
PACKING			
	141-6-133T-43700	Individual Carton	1
	141-6-144T-84200	Pad, Left Side	1
	141-6-144T-84300	Pad, Right Side	1
	141-6-410T-88200	Instruction Manual	1
	141-6-331T-07800	Protector Sheet, 470x800mm	1
	141-6-231T-40701	Polyethylene Bag, 400x700mm, Set	1
CABINET & CHASSIS			
1	141-0-122T-48200	Front Panel Assembly	1
2	141-2-111T-55000	Cabinet	1
3	141-0-126T-36724	Back Lid Assembly	1
4	141-2-125T-30800	Bottom Lid	1
5	141-2-160T-16501	Push Button, POWER/ EJECT	2
6	141-2-160T-09701	Push Button, REC MUTE	1
7	141-2-163T-89101	Rotary Knob, BIAS ADJ.	1
8	141-2-160T-25900	Push Button, DOLBY NR/ TAPE SELECT/INPUT SELECT	5
9	141-2-164T-32500	Slide Knob, INPUT LEVEL	2
10	141-2-253T-34000	Joint, Slide Knob	2
11	141-2-160T-25800	Push Button, STOP/REC/ PLAY/REW/F.FWD/ PAUSE	6
12	141-2-224T-14500	Bracket Lid, Cassette Compartment Lid	1
13	141-2-411T-14000	Plate Nut, Bracket Lid	2
14	141-2-124T-38900	Top Lid, Cassette Compartment Lid	1
15	141-2-421T-41900	Special Screw, Top Lid	2
16	141-2-856T-15900	Spring Coil, Bracket Lid	1
17	141-2-310T-84900	Bracket, Damper	1
18	141-2-877T-00100	Damper	1
19	141-2-253T-33900	Joint, Eject	1
20	141-2-855T-80300	Spring Coil, Joint	1
21	141-2-310T-85100	Bracket, Mechanism Stand	1
22	141-2-811T-12300	Counter, Tape	1
23	141-2-564T-21300	Square Belt, Tape Counter	1
24	141-2-310T-85000	Bracket, MIC	1
25	141-2-310T-85200	Bracket, AMP. P.C.B. Ground	1
26	141-2-210T-45700	Bracket, Input Level Volume	1
27	141-2-361T-21100	Bracket Resistor, Input Level Volume	1
28	141-2-464T-29700	Fixer, Lead Cord	2
29	141-2-856T-16100	Spring Coil, Record/Play	1
30	141-2-812T-12500	Bracket Counter, Tape Counter	1
	141-2-247T-16001	Sheet, Slide Knob mtg.	2
	141-2-464T-20600	Fixer, Lead mtg.	5
	141-6-415T-27800	Notice, Caution Label, Cabinet Left Side	1
CABINET & CHASSIS (HARTWARE)			
Y01		Pan Hd. Forming Screw, 2x8mm	1
Y03		Pan Hd. Forming Screw with Washer, 2.6x6mm	7
Y04		Pan Hd. Forming Screw with Washer, 3x6mm	1
Y05		Pan Hd. Screw with Spring Washer, 3x6mm	4
Y06		Pan Hd. Tapping Screw, 2.6x6mm	5
Y09		Pan Tapping Washer Hd. Screw, 3x8mm	2
Y10		Pan Tapping Washer Hd. Screw, 3x10mm	12

Key No.	Part No.	Description	Q'ty
CABINET & CHASSIS (HARDWARE)			
Y11		Pan Tapping Washer Hd. Screw, 3x12mm	1
Y12		Pan Tapping Washer Hd. Screw, 3x14mm	7
Y13		Binding Hd. Tapping Screw, 3x8mm	1
Y14		Binding Hd. Tapping Screw, 3x10mm	3
Y15		Binding Hd. Tapping Screw, 3x12mm	5
Y16		Binding Hd. Tapping Screw, 3x16mm	1
Y17		Binding Hd. Tapping Screw, 4x10mm	4
Y18		Flat Hd. Tapping Screw, 2.6x8mm	3
Y19		Binding Hd. Tapping Screw, 2.6x8mm	1
Y20		Washer, 3x8x0.5mm	1
ELECTRICAL PARTS			
71	4-243T-85171	⚠ Power Cord	1
72	4-300T-56400	⚠ Power Transformer (T901)	1
73	4-243T-19776	Lead Cord, Gray, LINE OUT	1
74	4-243T-19777	Lead Cord, Black, LINE IN	1
75	4-238T-62400	Switch, STOP (S8)	1
76		Not used	
77		Not used	
78	141-2-472T-08600	Lug, Ground	2
79	123-2-472R-00401	Lug, Ground	3
80	123-2-472R-00600	Lug, Ground	1
81	123-2-472R-00601	Lug, Lead mtg.	1
82* or 99	4-237T-10000	Terminal Board, Connection	1
CNS7	4-235T-60300	Socekt, 3P, R/P Head	1
CNS5	4-240T-48000	Socket, 8P Mechanism	1
AMP PCB ASS'Y			
91	141-4-250T-85500	P.C.B. Assembly, AMP.	1
IC301		Integrated Circuit, BA3706	1
IC501, 551		Integrated Circuit, NE654N	2
IC502, 552		Integrated Circuit, NE652N	2
IC701		Integrated Circuit, NJM4562SD	1
IC702, 703		Integrated Circuit, NJM4558S	2
Q601		Transistor, 2SC536AUD	1
Q602		Transistor, 2SC536AUD	1
Q603		Transistor, 2SD734 or 2SC1959	1
Q604		Transistor, 2SC536AUD	1
Q605		Transistor, 2SA608	1
Q606		Transistor, 2SA608	1
Q607		Transisotr, 2SA608	1
Q608		Not used	
Q609		Not used	
Q651		Not used	
Q652		Not used	
Q653		Not used	
Q701,801		Transistor, 2SC536AUD	2
Q702,802		Transistor, 2SC536AUD	2
Q703,803		Transistor, 2SC536AUD	2
Q901		Transistor, 2SD400 or 2SC2655	1
Q902		Transistor, 2SB544 or 2SA1020	1
D301		Diode, DSF10C or DSF10B	1
D601		Diode, 1SS133	1
D602		Diode, 1SS133	1
D603		Diode, DS442X	1
D605		Not used	
D606		Not used	

Key No.	Part No.	Description	Q'ty
AMP PCB ASS'Y			
D901,902 903,904		⚠ Diode, DSF10C or DSF10B	4
D906		Diode, GZA9.1X	1
D907		Diode, GZA9.1X	1
L501,551	4-255T-04271	MX Coil, 19kHz, 38kHz	2
L502,552	4-255T-04010 4-255T-04040	)or Filter, 19.9kHz	2
L601	4-258T-33140	Oscillator Coil	1
L701,801	4-252T-12922	Choke Coil, 6.8mH	2
L702,802	4-255T-02371	MX Coil, 85kHz	2
S1	4-238T-55600	Switch, Record/Play	1
S7	4-238T-22700	Switch, Beat Cancel	1
CNP7	4-236T-10200	Plug, 3P, R/P Head	1
CNP4	4-240T-24400	Socket 2P , Erasing Head	1
CNP5	4-236T-19776	Plug, 10P, Mechanism	1
SVR601 602	4-222T-97578	Semi-fixed Resistor, 100K ohm	2
SVR603	4-222T-97573	Semi-fixed Resistor, 2K ohm	1
SVR604	4-222T-97574	Semi-fixed Resistor, 5K ohm	1
SVR701 801	4-222T-97575	Semi-fixed Resistor, 10K ohm	2
SVR702 802	4-222T-97576	Semi-fixed Resistor, 20K ohm	2
SVR703 803	4-222T-97574	Semi-fixed Resistor, 5K ohm	2
RESISTORS			
All Resistors are Carbon P-type 1/6W, ±5% unless otherwise noted.			
R301		10K ohm	1
R302		10K ohm	1
R303		220K ohm	1
R304		220K ohm	1
R305		33K ohm	1
R306		47K ohm	1
R307		120 ohm	1
R501,551		3.3K ohm	2
R502,552		5.6K ohm	2
R503,553		6.8K ohm	2
R504,554		6.8K ohm	2
R505,555		1K ohm	2
R506,556		68K ohm	2
R507,557		1.2K ohm	2
R508,558		3.9K ohm	2
R509,559		2.2K ohm	2
R510		100K ohm	1
R511,561		4.7K ohm	2
R512,562		12K ohm	2
R513,563		47K ohm	2
R514,564		150K ohm	2
R515,565		150K ohm	2
R516,566		82K ohm	2
R517,567		330K ohm	2
R518,568		390K ohm	2
R519,569		390K ohm	2
R520,570		330K ohm	2
R522,572		1K ohm, ¼W	2
R523,573		1K ohm, ¼W	2
R601		39K ohm, ¼W	1
R602		8.2 ohm, ¼W	1
R603		39K ohm, ¼W	1
R604		15 ohm, ¼W	1
R605		1.5K ohm	1
R606		10 ohm, ¼W	1
R607		6.8K ohm	1
R608		10K ohm	1
R609		2.7K ohm	1
R610		15K ohm	1
R611		33K ohm	1
R612		4.7K ohm	1
R613		47 ohm	1
R615		10K ohm	1
R619		3.9K ohm	1
R620		10K ohm	1

Key No.	Part No.	Description	Q'ty
AMP PCB ASS'Y			
R621		220 ohm	1
R622		4.7K ohm	1
R623		1.8K ohm	1
R624		Not used	1
R625		Not used	1
R626		1.5K ohm	1
R651		Not used	1
R652		Not used	1
R653		Not used	1
R654		Not used	1
R655		Not used	1
R656		Not used	1
F657		Not used	1
R658		Not used	1
R659		Not used	1
R660		Not used	1
R701,801		6.8K ohm	2
R702,802		27K ohm	2
R703,803		270K ohm	2
R704,804		120 ohm, ¼W	2
R705,805		10K ohm	2
R706,806		6.8K ohm	2
R707,807		10K ohm	2
R708,808		15K ohm	2
R709,809		47K ohm	2
R710,810		1M ohm, ¼W	2
R711,811		47K ohm	2
R730,830		10K ohm	2
R731,831		3.3K ohm	2
R732,832		100K ohm	2
R733,833		10K ohm	2
R734,834		33K ohm	2
R735,835		270 ohm, ¼W	2
R736,836		2.2K ohm	2
R737,837		5.6K ohm	2
R751,851		5.6K ohm	2
R752,852		10K ohm	2
R753,853		33K ohm	2
R755,855		22K ohm	2
R760,860		4.7K ohm	2
R764,864		12K ohm	2
R902		Not used	1
R903		1.8K ohm, ¼W	1
R904		1.8K ohm, ¼W	1
R905		56 ohm, ¼W	1
R906		56 ohm, ¼W	1
CAPACITORS			
C301		Electrolytic, 1μF, 50V	1
C302		Electrolytic, 0.47μF, 16V	1
C303		Electrolytic, 0.47μF, 16V	1
C304		Electrolytic, 0.47μF, 16V	1
C305		Electrolytic, 10μF, 16V	1
C306		Electrolytic, 0.47μF, 16V	1
C501,551		Electrolytic, 0.33μF, 50V	2
C502,552		Ceramic, 0.0033μF, ±5%, 25V BC-type	2
C503,553		Electrolytic, 10μF, 16V	2
C504,554		Ceramic, 47pF, ±10%, 50V	2
C505,555		Ceramic, 180pF, ±10% 50V	2
C506,556		Ceramic, 0.01μF, ±5%, 25V, BC-type	2
C507		Electrolytic, 1μF, 50V	1
C508,558		Ceramic, 0.033μF, ±5%, 25V, BC-type	2
C509,559		Ceramic, 0.0047μF, ±5%, 25V, BC-type	2
C510,560		Ceramic, 0.0047μF, ±5%, 25V, BC-type	2
C511,561		Electrolytic, 10μF, 16V	2
C512,562		Electrolytic, 10μF, 16V	2
C513,563		Electrolytic, 10μF, 16V	2
C514,564		Ceramic, 0.068μF, ±5%, 25V, BC-type	2
C515,565		Ceramic, 0.047μF, ±5%, 25V, BC-type	2

Key No.	Part No.	Description	Q'ty
AMP PCB ASS'Y			
	CAPACITORS		
C516,566		Ceramic, 0.033μF, ±5%, 25V, BC-type	2
C517,567		Electrolytic, 0.1μF, 50V	2
C518,568		Electrolyitc, 0.15μF, 50V	2
C519,569		Electrolytic, 0.1μF, 50V	2
C520,570		Ceramic, 0.033μF, ±5%, 25V, BC-type	2
C521,571		Electrolytic, 0.22μF, 50V	2
C601		Ceramic, 180pF, ±10%, 50V	1
C602		Ceramic, 180pF, ±10%, 50V	1
C603		Ceramic, 200pF, ±10%, 50V	1
C604		Polypropylene, 0.0015μF, ±5%, 100V	1
C605		Ceramic, 470pF, ±10%, 50V	1
C606		Ceramic, 0.015μF, ±5%, 25V, BC-type	1
C607		Ceramic, 0.0033μF, ±5%, 25V, BC-type	1
C608		Ceramic, 0.01μF, ±5%, 25V BC-type	1
C609		Ceramic, 0.0033μF, ±5%, 25V, BC-type	1
C610		Electrolytic, 10μF, 16V	1
C611		Electrolytic, 1μF, 25V, Non-polar	1
C612		Electrolytic, 4.7μF, 25V	1
C613		Electrolytic, 10μF, 25V	1
C614		Electrolytic, 4.7μF, 25V	1
C620		Ceramic, 0.001μF ±10% 50V	1
C651		Not used	
C652		Not used	
C702,802		Ceramic, 680pF, ±5%, 50V	2
C703,803		Electrolytic, 47μF, 6.3V	2
C704,804		Ceramic, 100pF, ±5%, 50V	2
C705,805		Ceramic, 0.012μF, ±5%, 25V, BC-type	2
C706,806		Ceramic, 100pF, ±5%, 50V	2
C708,808		Ceramic, 0.0056μF, ±5%, 25V, BC-type	2
C730,830		Electrolytic, 4.7μF, 25V	2
C750,850		Electrolytic, 0.22μF, 50V	2
C751,851		Ceramic, 0.01μF, ±5%, 25V, BC-type	2
C752,852		Electrolytic, 4.7μF, 25V	2
C756,856		Ceramic, 680pF, ±5%, 50V	2
C903		⚠ Electrolytic, 1000μF, 16V	1
C904		Electrolytic, 470μF, 16V	1
C905		Electrolytic, 470μF, 10V	1
C906		Electrolytic, 470μF, 10V	1
C907		Electrolytic, 47μF, 10V	1
C908		Electrolytic, 47μF, 10V	1
FUNCTION SWITH P.C.B. ASS'Y			
92	141-4-250T-85600	P.C.B. Assembly, FUNCTION SWITCH	1
S2,3,4,5 6	4-238T-62200	Switch, DOLBY NR/TAPE SELECT/INPUT SELECT	1
	RESISTORS		
All Resistors are Carbon P-type 1/6W, ±5% unless otherwise noted.			
R521		3.3K ohm	1
R761,861		22K ohm	2
R762,862		8.2K ohm	2
R763,863		5.6K ohm	2
R765,865		8.2K ohm	2
R907		1K ohm	1
	CAPACITORS		1
			2
C522		Electrolytic, 22μF, 25V	
C754,854		Ceramic, 0.022μF, ±10%, 25V, BC-type	2
C755,855		Ceramic, 0.027μF, ±10%, 25V, BC-type	

Key No.	Part No.	Description	Q'ty
FUNCTION SWITCH P.C.B. ASS'Y			
C760,860		Ceramic, 0.0022μF, ±10%, 25V, BC-type	2
C761,861		Ceramic, 0.0022μF, ±10%, 25V BC-type	2
REC MUTE SW/BIAS ADJ./MIC P.C.B. ASS'Y			
93	141-4-250T-85700	P.C.B. Assembly, REC MUTE SW/BIAS ADJ./MIC	1
S16	4-238T-62300	Switch, REC MUTE	1
VR601	4-220T-08000	Variable Resistor, 10K ohm, BIAS ADJ.	1
	4-240T-41874	Socket, MIC	2
	141-2-853T-83300	Spring Plate, MIC Socket mtg.	2
	CAPACITORS		
C701,801		Ceramic, 680pF, ±5%, 50V	2
POWER SWITCH P.C.B. ASS'Y			
94	141-4-250T-85800	P.C.B. Assembly, POWER SWITCH	1
S14	⚠ 4-238T-45400	Switch, Power	1
	141-2-382T-07300	Terminal	2
PHONES P.C.B. ASS'Y			
95	141-4-250T-85900	P.C.B. Assembly, PHONES	1
	4-240T-09171	Socket, Phones	1
INPUT LEVEL VOLUME P.C.B. ASS'Y			
96	141-4-250T-86000	P.C.B. Assembly, INPUT LEVEL VOLUME	1
VR701 801	4-220T-07900	Variable Resistor, 50K ohm, INPUT LEVEL	2
LEVEL INDICATOR P.C.B. ASS'Y			
97	141-4-250T-86100	P.C.B. Assembly, LEVEL INDICATOR/LED	1
IC704 804		Integrated Circuit, AN6882	2
D1,2,3,4 5		LED, SLP272B-40, Green	1
D6,7		LED, SLP151B-50, Red	2
D8,9,10 11,12		LED, SLP272B-40, Green	1
D13,14 15,18		LED, SLP151-B-50, Red	4
D16,17		LED, SLP251B-50, Green	2
	141-2-210T-45600	Bracket, LED	1
	RESISTORS		
All Resistors are Carbon P-type 1/6W, ±5% unless otherwise noted.			
R741,841		15K ohm	2
R742,842		100K ohm	2
R743,843		18K ohm	2

Key No.	Part No.	Description	Q'ty
LEVEL INDICATOR P.C.B. ASS'Y			
	RESISTORS		
R744,844		4.7K ohm	2
R745,845		150 ohm, ¼W	2
R746,846		150 ohm, ¼W	2
R910		2.7K ohm	
	CAPACITORS		
C741,841		Electrolytic, 10μF, 16V	2
C742		Electrolytic, 22μF, 16V	1
CONNECTION PCB ASS'Y			
99*	141-4-250T-92100	P.C.B. Assembly, CONNECTION	1
	4-250T-92100	P.C. Board	1
	141-2-382T-07300	Terminal	6

MECHANISM EXPLODED VIEW

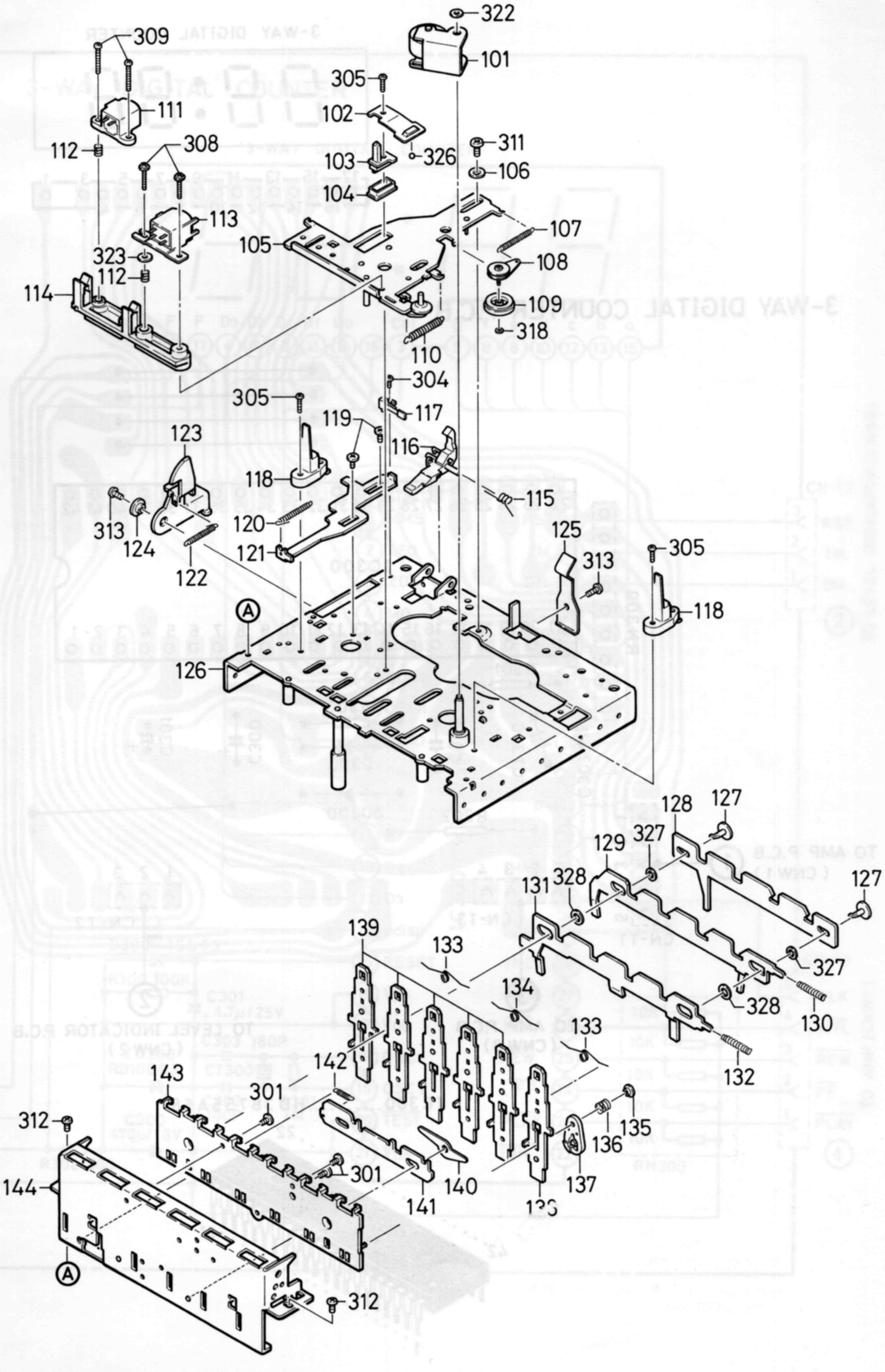

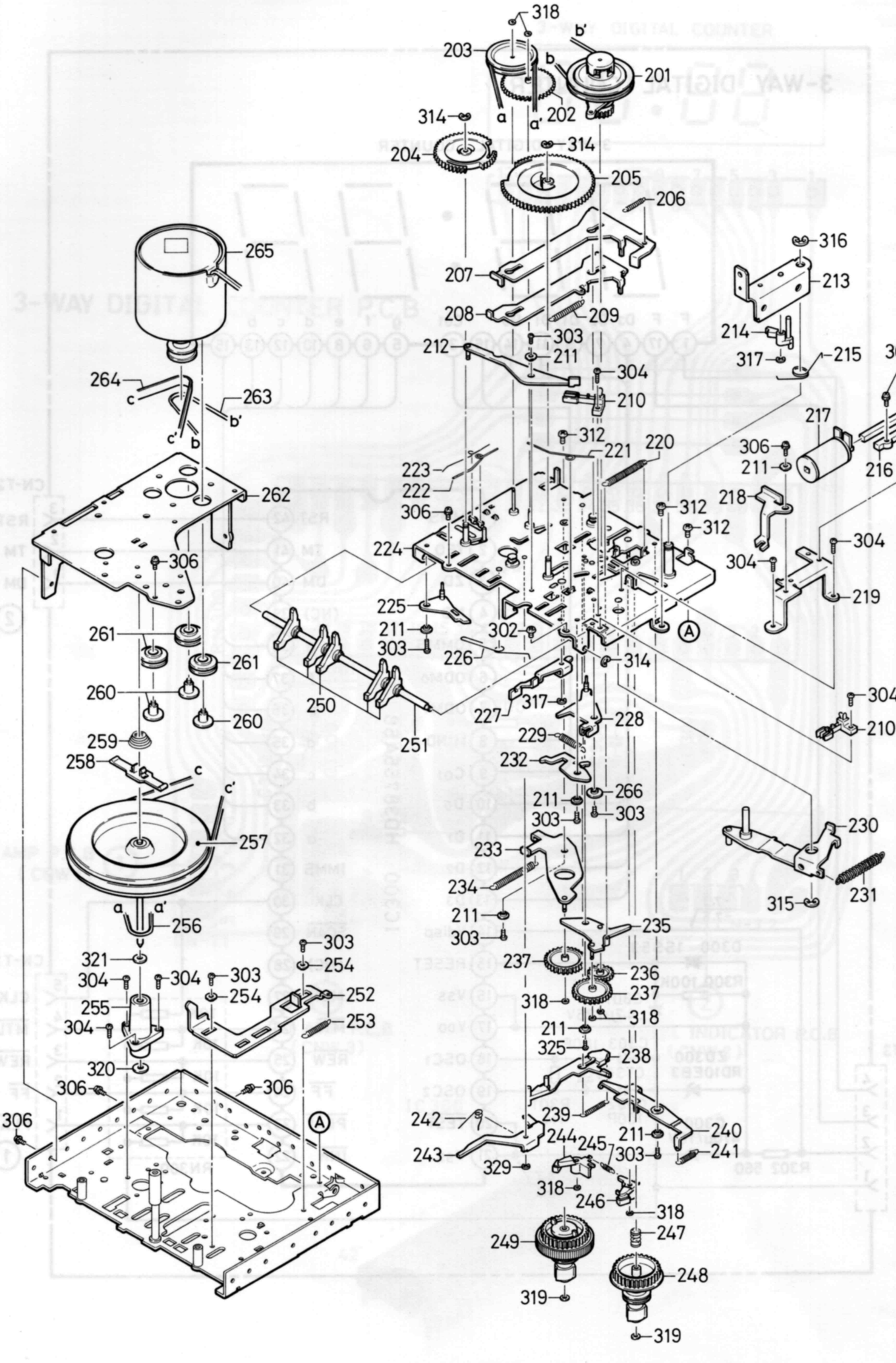

318
203
b'
b
201
a
a'
202
314
204
314
205
206
265
316
213
207
208
209
303
212
211
214
317
215
307
304
210
264
263
c
b'
c'
b
312
221
220
217
306
211
216
223
222
218
262
306
312
312
224
304
304
306
219
225
211
302
A
303
226
314
261
261
250
227
317
228
304
210
260
260
251
229
259
232
258
c
c'
266
211
303
303
230
257
233
234
231
315
211
a
a'
256
235
303
303
321
254
304
304
303
237
236
255
254
252
237
318
318
304
253
211
325
238
320
306
306
239
306
A
242
244
245
211
240
243
303
241
329
318
246
318
247
249
248
319
319

PARTS LIST

Key No.	Part No.	Description	Q'ty
MECHANISM (TM-S30TN)			
101	141-0-545T-08700	Lever Pinch Roller Assembly	1
102	141-2-853T-84200	Spring Plate, Head Panel Press	1
103	141-2-752T-19900	Post Pin, Guide	1
104	141-2-445T-29600	Rubber Cushion, Post Pin	1
105	141-0-732T-17900	Slide Assembly, Head Panel	1
106	141-2-461T-47800	Pipe, Collar	1
107	141-2-856T-22500	Spring Coil, Take Up Roller Shaft	1
108	141-0-732T-18000	Slide Assembly, Take Up Idler Shaft	1
109	141-0-661T-39100	Pulley Assembly, Take Up Idler	1
110	141-2-856T-22400	Spring Coil, Pressure	1
111	4-242T-27500	Magnetic Head, Erasing	1
112	141-2-856T-22200	Spring Coil, Head Azimuth	2
113	4-242T-25381	Magnetic Head, Record/Play	1
114	141-2-375T-08900	Bracket Head, Head Base	1
115	141-2-852T-84800	Spring Wire, Record Safety Lever	1
116	141-2-740T-02800	Lever, Record Safety Lever	1
117	4-238T-63400	Switch, Play, S9	1
118	141-2-530T-01200	Guide, Cassette	2
119	141-2-421T-40500	Special Screw, Slide	2
120	141-2-856T-21500	Spring Coil, Eject Stopper	1
121	141-2-732T-17100	Slide, Eject Stopper	1
122	141-2-856T-21700	Spring Coil, Eject Lever	1
123	141-2-740T-02700	Lever, Eject	1
124	141-2-461T-47400	Pipe, Eject	1
125	141-2-853T-84100	Spring Plate, Pack Hold	1
126	141-0-311T-45500	Chassis Assembly	1
127	141-2-465T-22200	Stopper, Function Lever	2
128	141-2-732T-17800	Slide, Function Lever	1
129	141-2-732T-17700	Slide, Button Function Lever	1
130	141-2-856T-22100	Spring Coil, Function Lever	1
131	141-2-732T-17600	Slide, Switch Function Lever	1
132	141-2-856T-22000	Spring Coil, Function Lever	1
133	141-2-852T-84900	Spring Wire, Button Lever	2
134	141-2-852T-85000	Spring Wire, Button Lever	1
135	141-2-465T-21200	Stopper, Pause	1
136	141-2-856T-21800	Spring Coil, Pause Lever	1
137	141-2-614T-06400	Lever Lock, Pause Lever	1
138	141-0-732T-17300	Slide Assembly, Pause Button Lever	1
139	141-0-732T-17500	Slide Assembly, Button Lever	5
140	141-2-740T-02900	Lever, REW/F. FWD Stopper	1
141	141-2-732T-17400	Slide, Record Stopper	1
142	141-2-856T-21900	Spring Coil, Record Stopper	1
143	141-2-737T-11000	Bracket Slide, Button Base	1
144	141-0-737T-10900	Bracket Slide Assembly, Flame	1
201	141-0-661T-39200	Pulley Assembly, REW/F. FWD Clutch	1
202	141-2-581T-31800	Gear, Cam Gear	1
203	141-2-661T-39000	Pulley, M.P. Gear	1
204	141-2-581T-31500	Gear, P	1
205	141-2-581T-31400	Gear, Main	1
206	141-2-856T-23600	Spring Coil, REW Lever	1
207	141-2-740T-04800	Lever, REW	1
208	141-2-740T-04900	Lever, F.FWD	1
209	141-2-856T-23700	Spring Coil, F.FWD Lever	1
210	4-238T-65600	Switch, F.FWD/REW, Motor, S10, S11	2
211	141-2-461T-47700	Pipe, Collar	7
212	141-0-740T-03700	Lever Assembly, Switch	1
213	141-0-740T-04000	Lever Assembly, Record Arm	1
214	141-2-740T-03900	Lever, Sensing Piece	1
215	141-2-852T-85100	Spring Wire, Sensing Piece	1
216	141-2-369T-10100	Bracket Coil, York	1
217	4-264T-12300	Magnetic Coil, Solenoid	1
218	141-2-740T-05100	Lever, Kick	1
219	141-2-310T-88700	Bracket, Solenoid	1
220	141-2-856T-23500	Spring Coil, REW Gear Arm	1
221	141-2-852T-85200	Spring Wire, Main Gear	1
222	141-2-852T-85500	Spring Wire, P. Gear	1
223	141-2-852T-85400	Spring Wire, P. Gear Trigger Arm	1
224	141-0-312T-18900	Sub Chassis Assembly	1
225	141-0-740T-04200	Lever Assembly, P. Gear Trigger Arm	1
226	141-2-852T-85300	Spring Wire, Switch Lever	1

Key No.	Part No.	Description	Q'ty
MECHANISM (TM-S30TN)			
227	141-2-740T-03600	Lever, Switching	1
228	141-0-740T-03500	Lever Assembly, Main Trigger Arm	1
229	141-2-856T-23800	Spring Coil, Main Trigger Arm	1
230	141-0-740T-04100	Lever Assembly, Lift Arm	1
231	141-2-856T-23100	Spring Coil, Lift Arm	1
232	141-2-740T-03400	Lever, Main Trigger	1
233	141-0-740T-04700	Lever Assembly. F.FWD Gear Arm	1
234	141-2-856T-23400	Spring Coil, F.FWD Gear Arm	1
235	141-0-740T-05200	Lever Assembly, REW, Gear Arm	1
236	141-2-581T-31700	Gear, REW	1
237	141-2-581T-31600	Gear, F.FWD	2
238	141-2-740T-03800	Lever, Sensing Plate	1
239	141-2-856T-23000	Spring Coil, Sensing Plate	1
240	141-2-740T-04600	Lever, Regulating Plate	1
241	141-2-856T-23300	Spring Coil, Regurating Plate	1
242	141-2-852T-85600	Spring Wire, Auto Lever	1
243	141-2-740T-04300	Lever, Auto Lever	1
244	141-0-740T-04500	Lever Assembly, Brake Arm (R)	1
245	141-2-856T-23200	Spring Coil, Brake	1
246	141-0-740T-04400	Lever Assembly, Brake Arm (L)	1
247	141-2-856T-22700	Spring Coil, Back Tension	1
248	141-0-661T-38900	Pulley Assembly, Supply Reel	1
249	141-0-661T-38800	Pulley Assembly, Tape Up Reel	1
250	141-2-740T-05000	Lever, Operation	5
251	141-2-754T-48900	Shaft, Operating Lever	1
252	141-2-732T-17200	Slide, Record Slide Lever	1
253	141-2-856T-21600	Spring Coil, Record Slide Lever	1
254	141-2-461T-47300	Pipe, Collar	2
255	141-0-573T-17300	Bracket Assembly, Flywheel	1
256	141-2-564T-30800	Square Belt	1
257	141-0-521T-14900	Flywheel Assembly	1
258	141-2-571T-22800	Bearing Axis, Flywheel	1
259	141-2-856T-22600	Spring Coil, Damper	1
260	141-2-421T-38900	Special Screw, Motor	3
261	141-2-445T-29700	Rubber Cushion, Motor	3
262	141-2-378T-14300	Bracket Motor	1
263	141-2-564T-30200	Square Belt	1
264	141-2-561T-06300	Flat Belt, Main Belt	1
265	4-527T-20002	Motor Assembly	1
266	141-2-461T-47500	Pipe, Collar	1
301	141-2-421T-45000	Special Screw, Bind Screw 2x3mm	3
302	141-2-421T-45100	Special Screw, Bind Screw 2x4mm	1
303		Pan Hd. Forming Screw, 2x4mm	8
304		Pan Hd. Forming Screw, 2x5mm	8
305		Pan Hd. Forming Screw, 2x6mm	3
306		Pan Hd. Screw with Spring Washer, 2x4mm	6
307		Pan Hd. Screw with Spring Washer, 2x5mm	2
308	141-2-421T-45300	Special Screw, Cap Screw 2x10mm	2
309		Pan Hd. Screw, 2x11mm	2
310			
311	141-2-421T-45200	Special Screw, Bind C Tapping Screw 2.6x6mm	1
312		Pan Hd. Forming Screw, 2.6x4mm	5
313		Pan Hd. Forming Screw, 2.6x5mm	2
314	141-2-457T-23000	Specail Washer, E-Ring 2mm	3
315	141-2-457T-23300	Special Washer, E-Ring 2.3mm	1
316	141-2-457T-23100	Special Washer, E-Ring 3mm	1
317	141-2-457T-23800	Special Washer, E-Ring 1.5mm	2
318	141-2-453T-33600	Graphite Nylon Washer, 1.2x3x0.25mm	8
319	141-2-453T-25700	Graphite Nylon Washer, 1.6x3.8x0.3mm	2

PARTS LIST

Key No.	Part No.	Description	Q'ty
MECHANISM (TM-S30TN)			
320	141-2-453T-25400	Graphite Nylon Washer, 2.5×7×0.5mm	1
321	141-2-453T-25500	Graphite Nylon Washer, 2.5×6×0.5mm	1
322	141-2-453T-25600	Graphite Nylon Washer, 2.1×5×0.4mm	1
323	141-2-453T-64600	Washer, 2.1×5×0.2mm	1
324			
325	141-2-421T-45400	Special Screw, Pan S Tapping Screw 2×3.5mm	1
326	141-2-345T-00400	Steel Ball, 2φ	1
327	141-2-453T-30200	Graphite Nylon Washer, 2.5×4.7×0.13mm	2
328	141-2-453T-30400	Graphite Nylon Washer, 3.5×6×0.13mm	2
329	141-2-457T-23700	Special Washer, E-Ring, 1.2mm	1

SANYO ELECTRIC INC.
1200, West Artesia Blvd.,
P.O. Box 5177
Compton California 90220

Jan./'83/7000 SI Printed in Japan

MODIFICATION NOTICE

SANYO

CASSTTE TAPE DECK

• RD S30 (USA)	WM-9452	• RD S40 (USA)	WM-9380
RD S30 (CANADA)	WM-9453	RD S40 (CANADA)	WM-9451
• RD S30-2 (USA)	WM-11015	• RD S40-2 (USA)	WM-11016
RD S30-2 (CANADA)	WM-11051	RD S40-2 (CANADA)	WM-11052

Date Mar. 9, 1984 Issued by

The following corrections should be made in the SERVICE MANUALS aod PARTS (PRICE) LIST.

		Section	Key No.	Part No.	Description	Q'ty	Remark	Reason
1	From	Mechanism	265	4-527T-20002	Motor Assy			E
	To		"	4-527T-24301	"			
2	From							
	To							
3	From							
	To							

INTERCHANGEABLE NOT INTERCHANGEABLE	Serial No. Chassis No.	Effective from
Q'ty of initial production before modification.	Identification of modified unit.	

REASON FOR MODIFICATION
A ······Standardization
B ······Change of materials
C ······Improvement of reliadility
D ······Improvement of performance
E ······Misprint
F ······Registration
G ······

MODEL RD S30 W

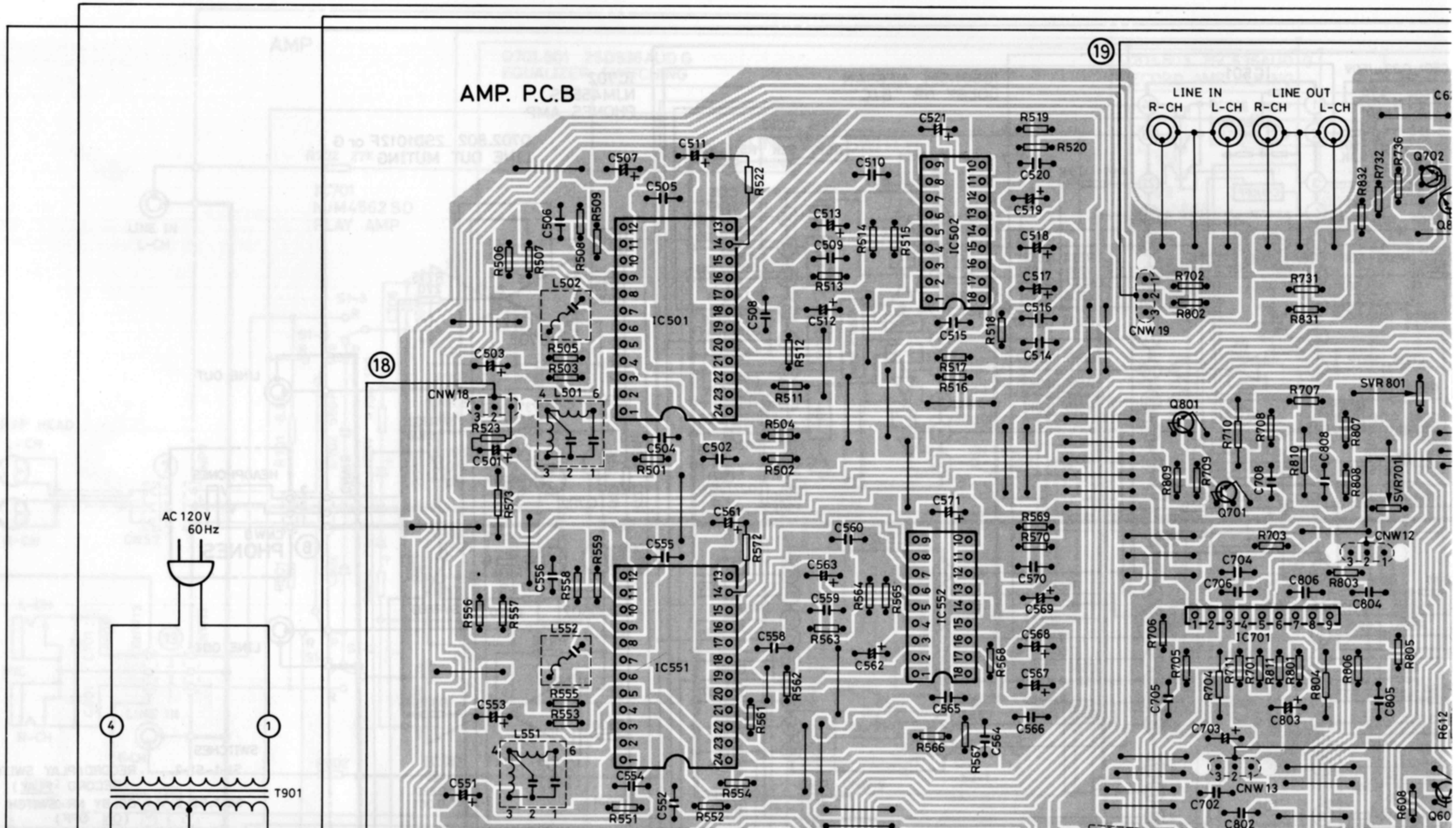

WIRING DIAGRAM

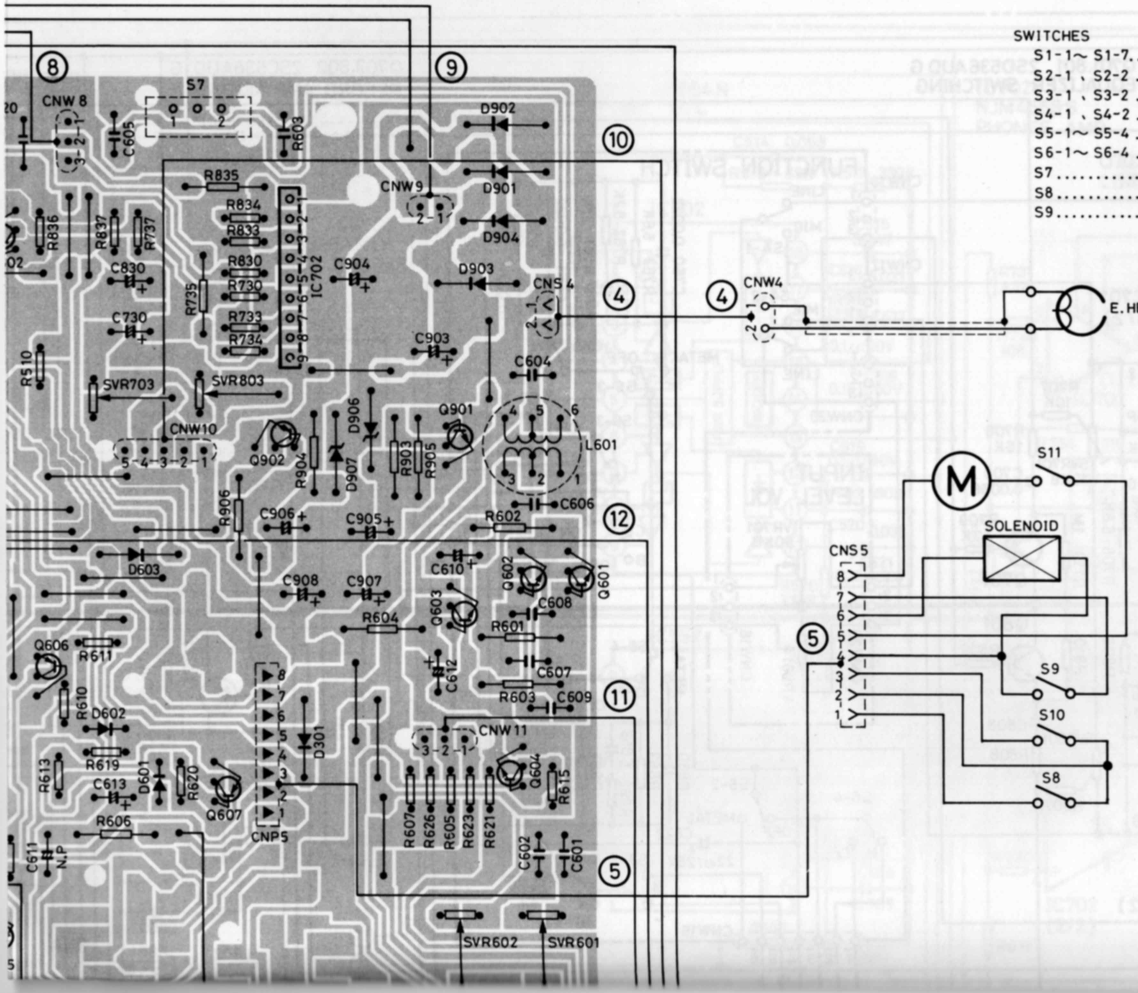

SWITCHES

S1-1～S1-7.....RECORD/PLAY SWITCH
S2-1 、S2-2 ....DOLBY NR SWITCH
S3-1 、S3-2 ....DOLBY NR SWITCH
S4-1 、S4-2 ....INPUT SELECT SWITCH
S5-1～S5-4 ....TAPE SELECT SWITCH
S6-1～S6-4 ....TAPE SELECT SWITCH
S7..............BEAT CANCEL SWITCH
S8..............STOP SWITCH
S9..............PLAY SWITCH
S10..............F. FWD/REW (AMSS) SWITCH
S11..............MOTOR SWITCH
S14..............POWER SWITCH
S16..............REC MUTE SWITCH

CONTROLS

VR601..............BIAS ADJUST
VR701 、801.......INPUT LEVEL

IC301 ......BA3706

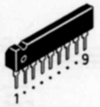

IC501 、551.......NE654N

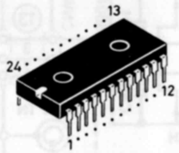

IC502 、552 ....NE652N

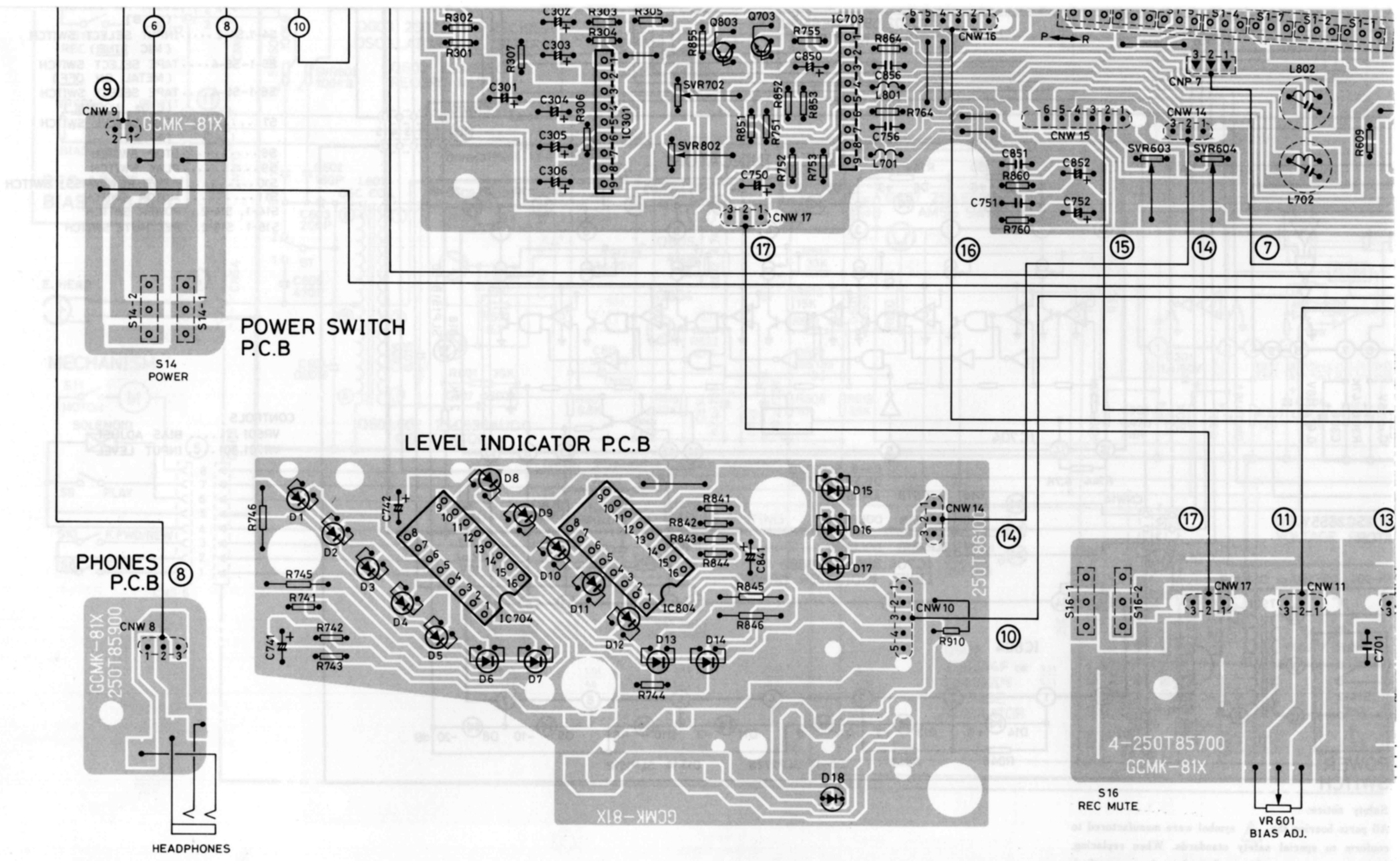

POWER SWITCH
P.C.B
S14
POWER
CNW 9
GCMK-81X
LEVEL INDICATOR P.C.B
250T8610
PHONES
P.C.B
CNW 8
GCMK-81X
250T85900
HEADPHONES
4-250T85700
GCMK-81X
S16
REC MUTE
VR601
BIAS ADJ.
CNW 17
CNW 11
CNW 14
CNW 10
CNW 15
CNW 16
CNP 7
IC301
IC703
IC704
IC804
SVR702
SVR802
SVR603
SVR604
L802
L702
L801
L701
Q803
Q703

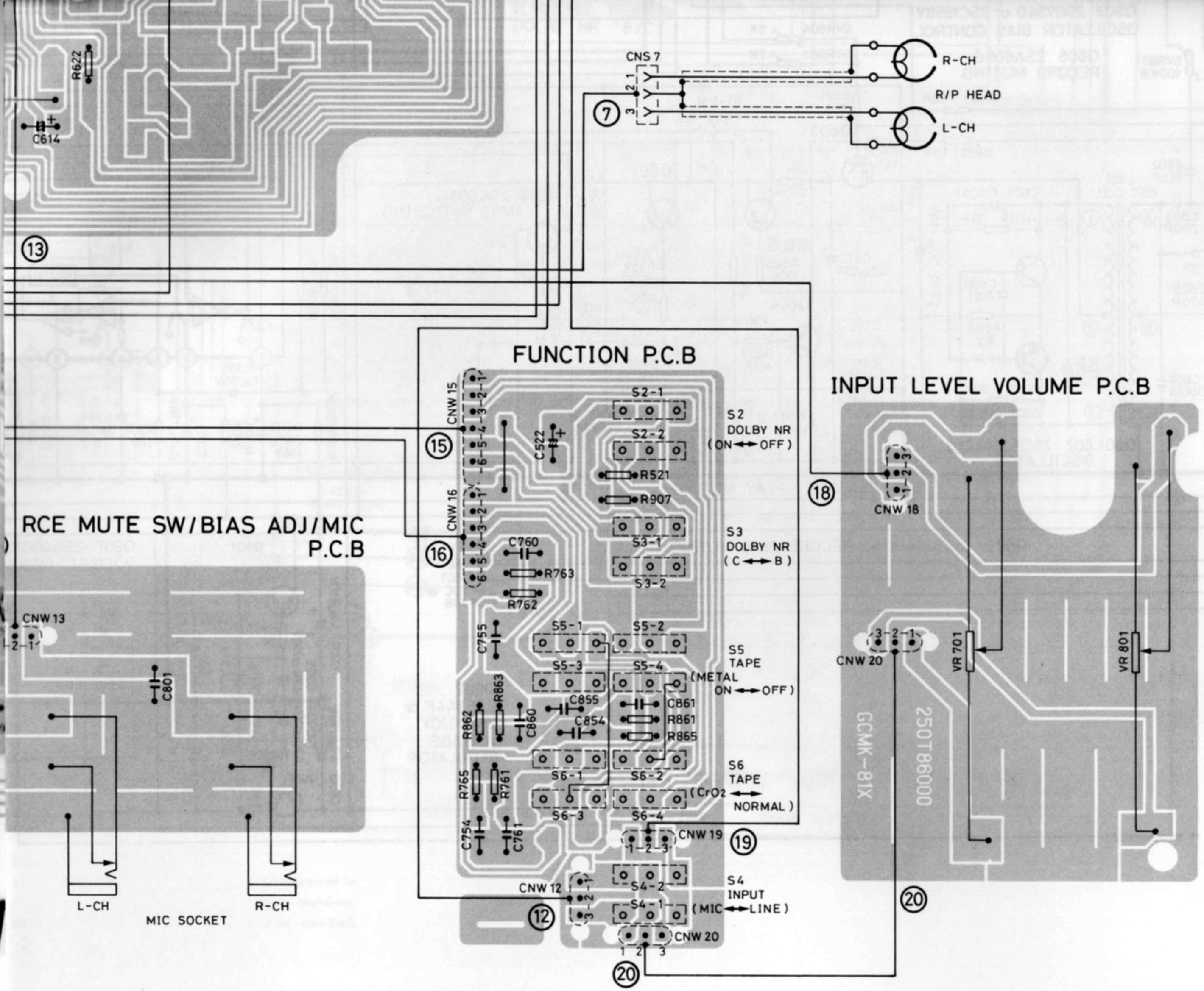

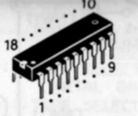

IC701 ....NJM4562SD
IC702 , 703.....NJM4558S

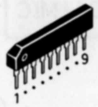

IC704 , 804 ......AN6882

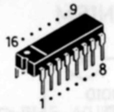

Q601, 602, 604, 701,
801, 703, 803........2SC536

Q605, 606, 607........2SA608
Q603.......2SD734 or 2SC1959
Q702 , 802 ....2SD1012

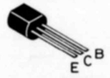

Q901......2SD400 or 2SC2655
Q902 .....2SB544 or 2SA1020

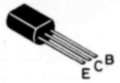

MODEL RD S30 SCH

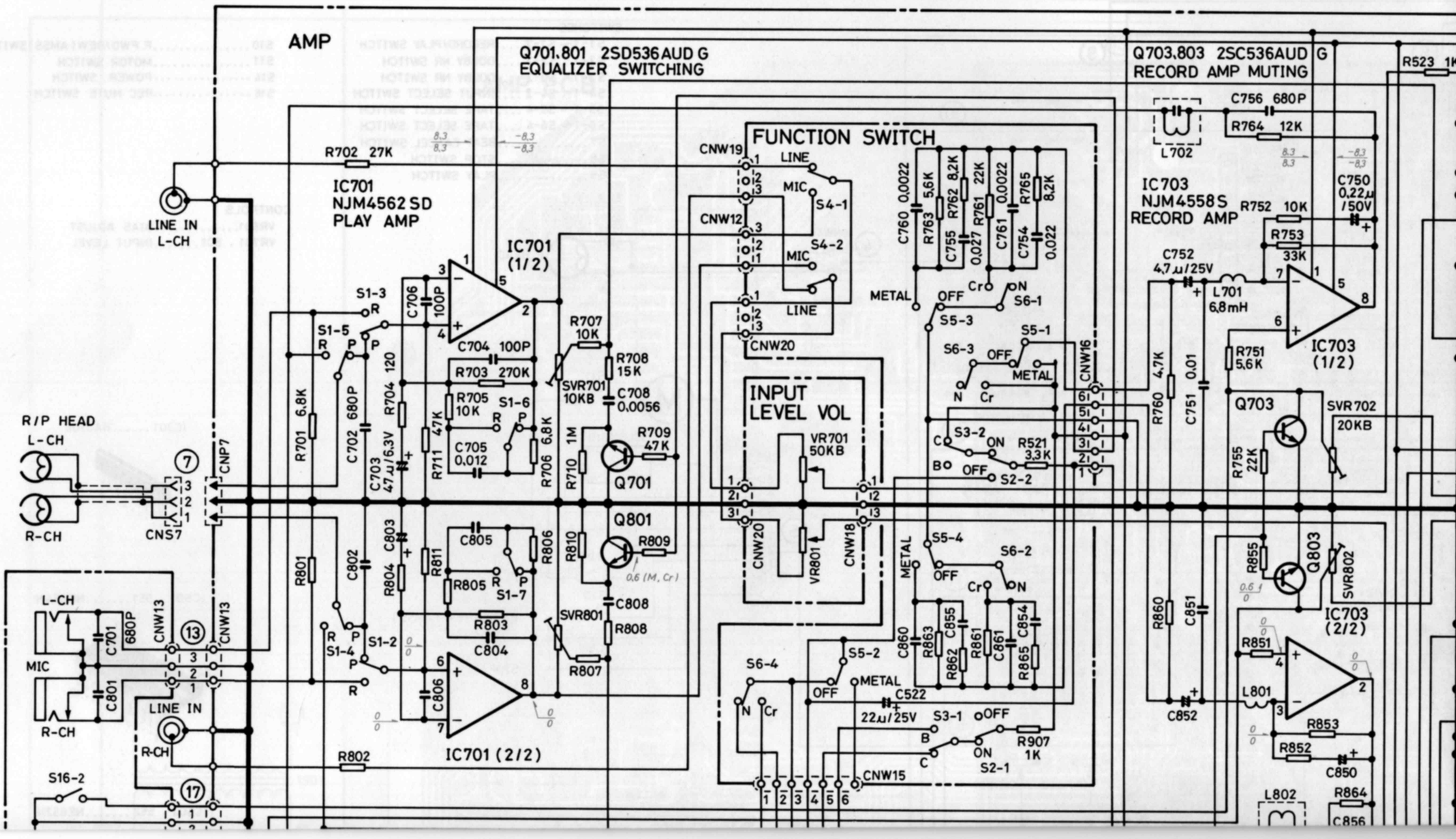

IEMATIC DIAGRAM

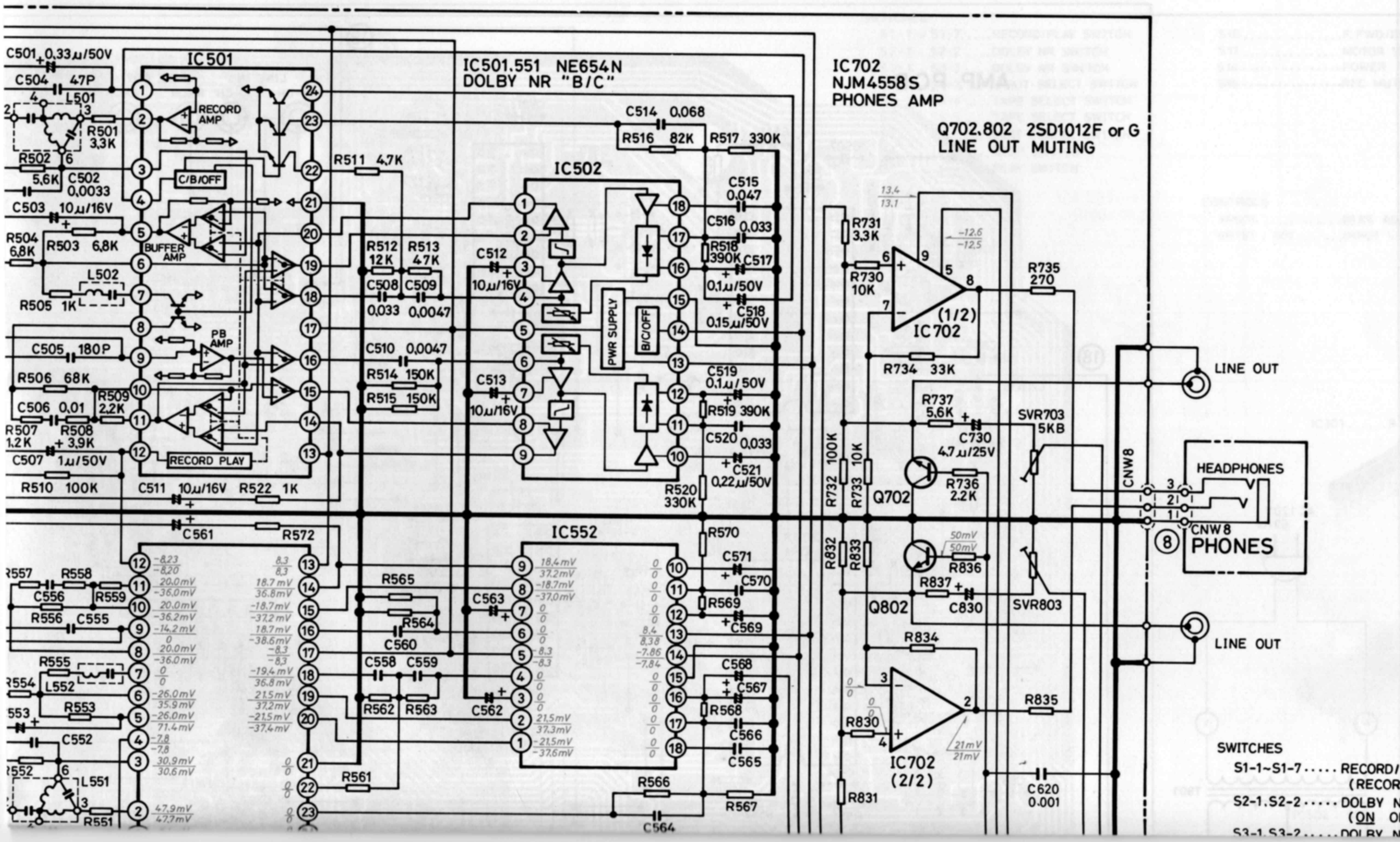

SWITCHES
S1-1~S1-7..... RECORD/PLAY SWITCH
(RECORD PLAY)
S2-1, S2-2..... DOLBY NR SWITCH
(ON OFF)
S3-1, S3-2..... DOLBY NR SWITCH

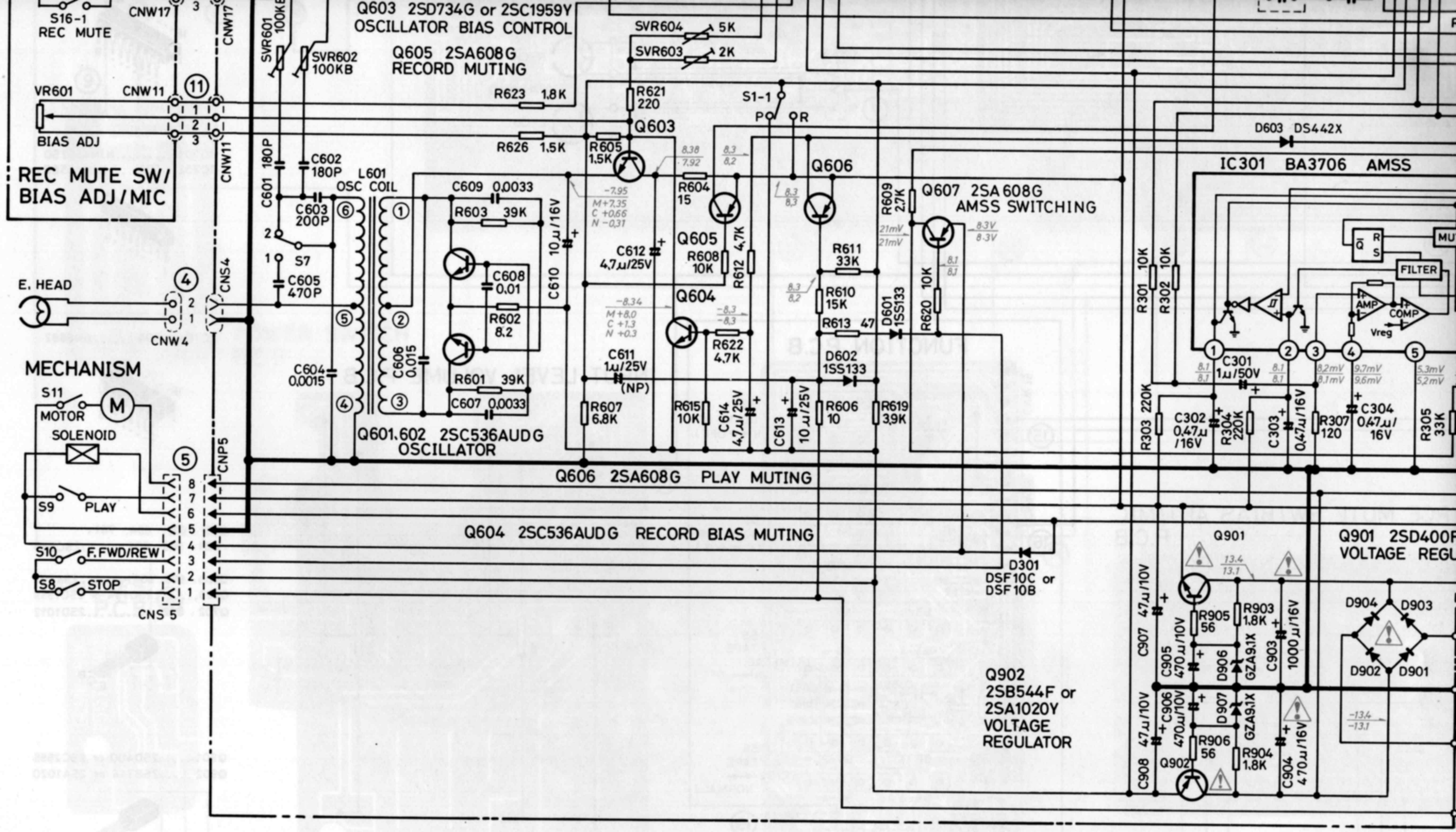

REC MUTE SW/
BIAS ADJ/MIC
S16-1
REC MUTE
VR601
BIAS ADJ
CNW17
CNW11
E. HEAD
CNW4
CNS4
MECHANISM
S11
MOTOR
SOLENOID
S9
PLAY
S10
F.FWD/REW
S8
STOP
CNS 5
CNP5
Q603 2SD734G or 2SC1959Y
OSCILLATOR BIAS CONTROL
Q605 2SA608G
RECORD MUTING
SVR601 100KB
SVR602 100KB
SVR604 5K
SVR603 2K
R623 1.8K
R626 1.5K
R621 220
R605 1.5K
R604 15
S1-1
C601 180P
C602 180P
C603 200P
S7
C605 470P
C604 0,0015
L601 OSC COIL
C606 0,015
C609 0,0033
R603 39K
C608 0,01
R602 8,2
R601 39K
C607 0,0033
C610 10µ/16V
Q601,602 2SC536AUDG
OSCILLATOR
C612 4,7µ/25V
R608 10K
R612 4,7K
Q604
R622 4,7K
C611 1µ/25V (NP)
R607 6,8K
R615 10K
C614 4,7µ/25V
C613 10µ/25V
Q606
R611 33K
R610 15K
R613 47
D602 1SS133
R606 10
R619 3,9K
R609 2,7K
D601 1SS133
R620 10K
Q607 2SA608G
AMSS SWITCHING
Q606 2SA608G PLAY MUTING
Q604 2SC536AUDG RECORD BIAS MUTING
D301
DSF10C or
DSF10B
Q902
2SB544F or
2SA1020Y
VOLTAGE
REGULATOR
D603 DS442X
IC301 BA3706 AMSS
FILTER
AMP
COMP
Vreg
R301 10K
R302 10K
C301 1µ/50V
R303 220K
C302 0,47µ/16V
R304 220K
C303 0,47µ/16V
R307 120
C304 0,47µ/16V
R305 33K
Q901
Q901 2SD400F
VOLTAGE REGU
C907 47µ/10V
C905 470µ/10V
R905 56
R903 1,8K
D906 GZA9,1X
C903 1000µ/16V
C908 47µ/10V
C906 470µ/10V
D907 GZA9,1X
R906 56
R904 1,8K
C904 470µ/16V
Q902
D904
D903
D902
D901

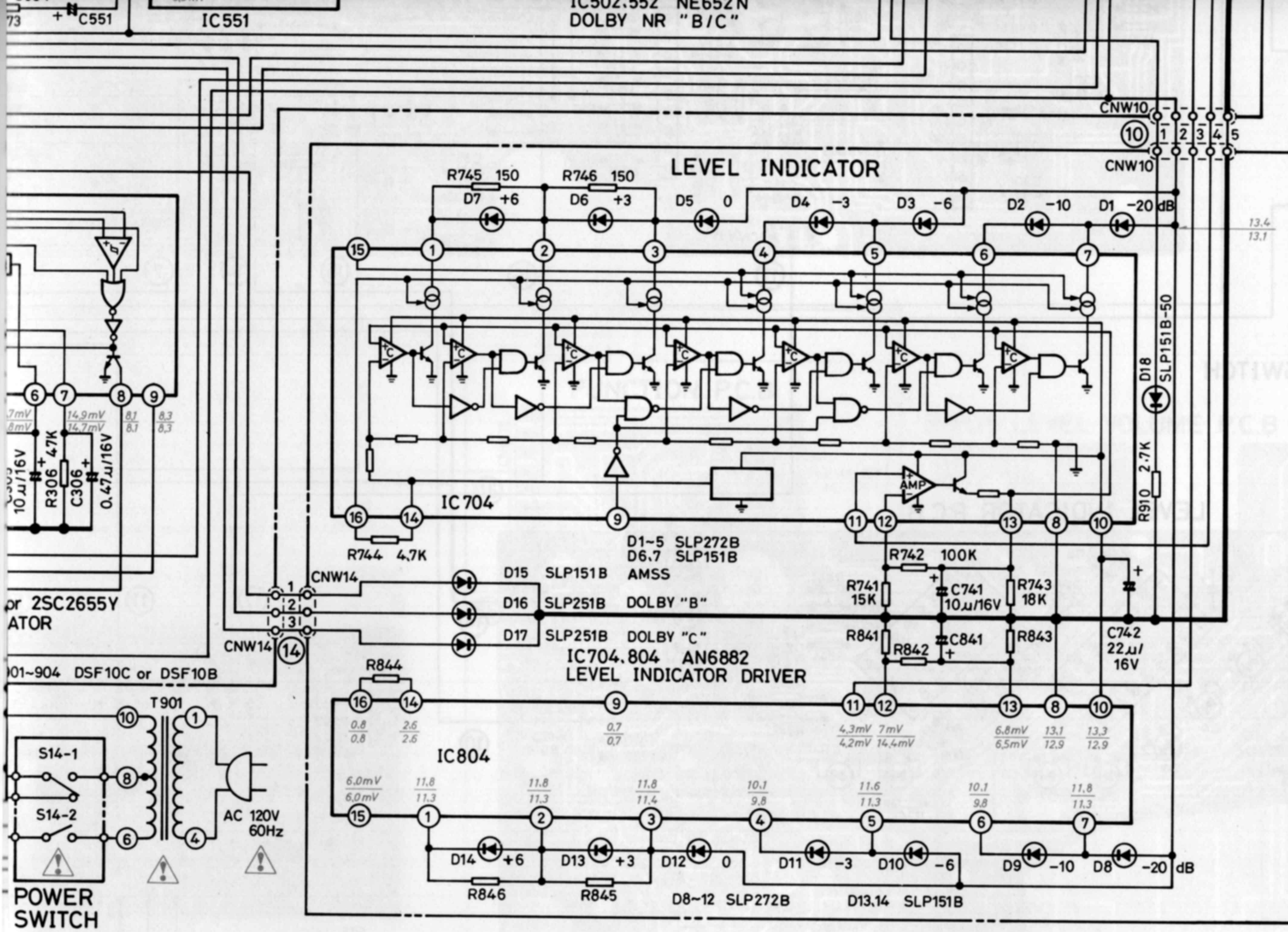

Safety notice:
All parts bearing the ⚠ symbol were manufactured to conform to special safety standards. When replacing, do not use parts numbers other than those specified.

S4-1.S4-2 .....INPUT SELECT SWITCH
(MIC LINE)
S5-1~S5-4 ....TAPE SELECT SWITCH
(METAL ON OFF)
S6-1~S6-4 ....TAPE SELECT SWITCH
(CrO2 NORMAL)
S7 ....BEAT CANCEL SWITCH
(1 2)
S8 ....STOP SWITCH
S9 ....PLAY SWITCH
S10 ....F.FWD/REW(AMSS) SWITCH
S11 ....MOTOR SWITCH
S14-1. S14-2....POWER SWITCH
S16-1. S16-2....REC MUTE SWITCH

CONTROLS
VR601 .... BIAS ADJUST
VR701.801 .... INPUT LEVEL